BARIS 52 LED DIR/IND IOT BT PIR HYT 1423MM 4425/2700LM 830 IP40 I CL. DALI PLX BLACK 36W/22W SINGLE SENSOR WITH INCL.

DETAILED CARD

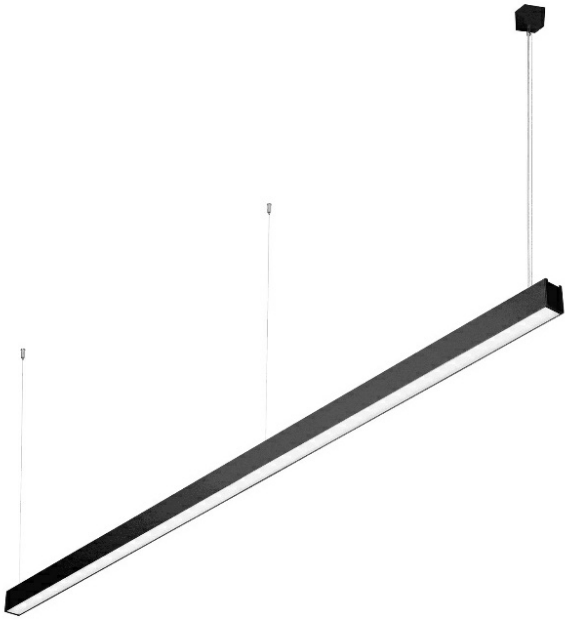

TECHNICAL PARAMETERS

Ingress protection:	IP40
Impact resistance:	IK06
Nominal power [W]:	58
Luminous flux [lm]*:	7125
Colour temperature [K]:	3000
Material of the body:	aluminium
Colour of the body:	black
Diffuser material:	PC
Diffuser type:	OPAL
Mounting version:	suspended

CHARACTERISTICS

Baris 52 LED IoT is a modern suspended lamp that combines elegant design with advanced technology. The modular design makes it easy to service and the unique suspension system ensures simple installation. Available with mounting box or optional plug-in socket. **IoT characteristics**The **IoT BT PIR HYT DALI** version has: a built-in**BT HYT** module that allows you to program functions in the Lena Lighting Clue app and control in real time; **PIR** motion and daylight sensor and**DALI** driver for dimming the light source.

APPLICATION

The luminaire is dedicated to indoor use. It is used as a source of light for offices requiring focussed eyesight where low UGR and illumination of dark areas (e.g. ceilings) are required. The unique design, energy-efficient LED modules, and the possibility of cooperation with external lighting control systems in the DALI standard dedicate the luminaire to be used in modern office buildings of A+ class, with particular consideration for offices, representative rooms, conference halls, and passageways.
Baris 52 LED DIR/IND Single, as the name suggests, is a single luminaire with a pre-determined length. To create a line of length up to 6 meters without joining the profile and up to 25 meters without joining the diffuser allows version BARIS 52 LED.

BARIS 52 LED DIR/IND IOT BT PIR HYT 1423MM 4425/2700LM 830 IP40 I CL. DALI PLX BLACK 36W/22W SINGLE SENSOR WITH INCL.

DETAILED CARD

TECHNICAL PARAMETERS TABLE

Index:	932540
EAN:	5905963932540
Light source:	LED module
Rated power of the luminaire [W]:	58
Luminous flux [lm]:	7125
Supply voltage [V]:	220 - 240
Frequency [Hz]:	50 - 60
Luminous efficacy [lm/W]:	123
Energy efficiency class:	D
Electrical protection class:	I
Colour temperature [K]:	3000
SDCM:	3
LED lifespan L70B50 [h]:	150000
LED lifespan L80B10 [h]:	100000
LED lifespan L90B10 [h]:	50000
Diffuser material:	PC
Diffuser type:	OPAL
Diffuser colour:	milky
Material of the body:	aluminium

Colour of the body:	black
Dimensions (H/W/T/S) [mm]:	1423/69/52
Impact resistance:	IK06
Ingress protection:	IP40
Mounting version:	suspended
Working temperature [°C]:	from 0 to +35
DIMM DALI:	yes
Version:	BT PIR HYT DALI
Net weight [kg]:	2.800
ETIM class:	EC000109
Warranty [years]:	5
CE certificate:	40/2026
PZH certificate:	B-BK-60112-0357/2023
Manual:	Download PDF
Environmental Product Declaration (EPD):	852/2025
Category of application:	office lighting
ISO Certificates:	9001:2015, 14001:2015, 45001:2018, 50001:2018
Plik LDT:	Download

BARIS 52 LED DIR/IND IOT BT PIR HYT 1423MM 4425/2700LM 830 IP40 I CL. DALI PLX BLACK 36W/22W SINGLE SENSOR WITH INCL.

~~TECHNICAL PICTURES~~

DETAILED CARD

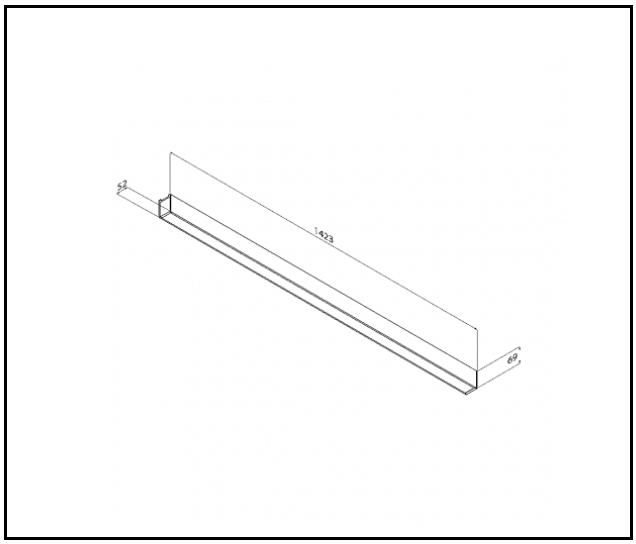

Card creation date: 17 March 2026

The company reserves the right to make design changes or upgrades in the presented product. Product data sheet does not constitute an offer. * Parameter tolerance is +/- 10%

This product is a subject to electric andelectronic waste equipment regulations (WEEE).

Certificate CE - Nr: 40/2026

LENA LIGHTING

Lena Lighting S.A.
ul. Kórnicka 52, 63-000 Środa Wielkopolska
tel. +48 61 28 60 333 (Pn-Pt, 8-16), e-mail: hello@lenalighting.pl, www.lenalighting.pl