# BARIS 52 LED N 583MM 1000LM 840 IP44 I CL. UGR ANODA CO 10W WITH RASTER. SINGLE

DETAILED CARD

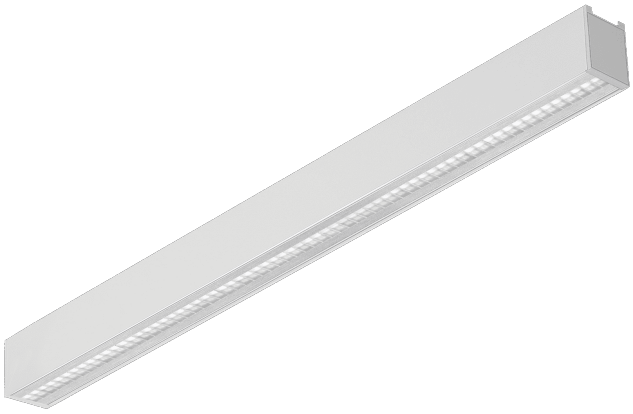

## TECHNICAL PARAMETERS

| | |
|---|---|
| **Ingress protection:** | IP44 |
| **Impact resistance:** | IK06 |
| **Rated power of the luminaire [W]*:** | 10 |
| **Luminous flux [lm]*:** | 1000 |
| **Colour temperature [K]:** | 4000 |
| **Material of the body:** | aluminium |
| **Colour of the body:** | grey |
| **Diffuser material:** | PC |
| **Diffuser type:** | UGR |
| **Mounting version:** | surface |

## CHARACTERISTICS

Suspended or surface-mounted luminaire with classic proportions and modern design. The housing of the luminaire is made of an anodized aluminum profile in gray or an aluminum profile painted in white or black (other colors available on request). The optical system is in the form of a prismatic diffuser (PRM); a dedicated, flexible opal diffuser evenly illuminating the luminaire or with a louver that meets the stringent glare requirements UGR <19 covered with a transparent cover. The modularity and dismantling of the luminaire allow for the replacement of electronic components, such as the LED strip, power supply, and replacement of the lampshade by qualified persons. The luminaire profile has been adapted to work with intelligent IoT modules, which will additionally optimize the level and amount of light provided by it, as well as the direct/indirect version that allows some of the light to be directed upwards, illuminating the ceiling. The luminaire is equipped with a unique suspension system that facilitates the installation of the luminaire and adjustment of the suspension. All Baris 52 LED Single suspended luminaires include 1.2m long pendants with a socket in the set and are equipped with a diffuser.

## APPLICATION

The luminaire is intended for indoor use. It is used as the main light source and favors office work that requires concentrated vision. The unique design, the energy-saving LED modules, and the ability to work with external lighting control systems in the DALI standard predestine the luminaire for use in modern office buildings of class A+, with a particular focus on offices, prestigious rooms, conference rooms, passageways, and wherever IP44 protection is required.
Baris 52 LED Single is, as the name suggests, a single lighting element with a specific length. To create a line of length up to 6 meters without connecting the profile and up to 25 meters without connecting the lampshade, version BARIS 52 LED.

# BARIS 52 LED N 583MM 1000LM 840 IP44 I CL. UGR ANODA CO 10W WITH RASTER. SINGLE

DETAILED CARD

## TECHNICAL PARAMETERS TABLE

| | |
|---|---|
| **Index:** | 461767 |
| **EAN:** | 5905963461767 |
| **Light source:** | LED module |
| **Rated power of the luminaire [W]:** | 10 |
| **Luminous flux [lm]:** | 1000 |
| **Supply voltage [V]:** | 220 - 240 |
| **Frequency [Hz]:** | 50 - 60 |
| **Luminous efficacy [lm/W]:** | 95 |
| **Energy efficiency class:** | F |
| **Electrical protection class:** | I |
| **Colour temperature [K]:** | 4000 |
| **Color rendering index (Ra) >:** | 80 |
| **SDCM:** | 3 |
| **LED lifespan L70B50 [h]:** | 111500 |
| **LED lifespan L80B10 [h]:** | 70400 |
| **LED lifespan L90B10 [h]:** | 34000 |
| **Diffuser material:** | PC |
| **Diffuser type:** | UGR |
| **Diffuser colour:** | transparent |
| **Optics:** | raster |

| | |
|---|---|
| **Material of the body:** | aluminium |
| **Colour of the body:** | grey |
| **Dimensions (H/W/T/S) [mm]:** | 583/69/52 |
| **Impact resistance:** | IK06 |
| **Ingress protection:** | IP44 |
| **Mounting version:** | surface |
| **Working temperature [°C]:** | from -25 to +35 |
| **Net weight [kg]:** | 1 |
| **UGR (4H8H):** | <19 |
| **Category of application:** | office lighting |
| **Photobiological safety:** | Risk Group 1 (no photobiological hazard under normal behavioral limitation) |
| **Warranty [years]:** | 5 |
| **CE certificate:** | 234/2023 |
| **ENEC Certificate:** | PL BBJ/006/2022/M1 |
| **PZH certificate:** | B-BK-60112-0357/2023 |
| **Environmental Product Declaration (EPD):** | 852/2025 |
| **Manual:** | Download PDF |
| **ISO Certificates:** | 9001:2015, 14001:2015, 45001:2018, 50001:2018 |
| **Plik LDT:** | Download |

## LIGHT CURVES

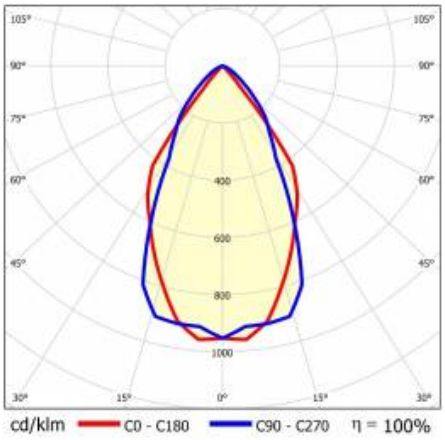

# BARIS 52 LED N 583MM 1000LM 840 IP44 I CL. UGR ANODA CO 10W WITH RASTER. SINGLE

DETAILED CARD

**TECHNICAL PICTURES**

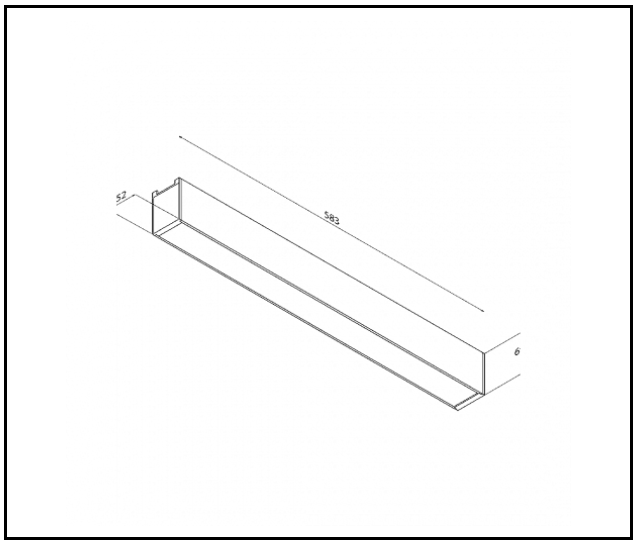


Card creation date: 17 September 2026

The company reserves the right to make design changes or upgrades in the presented product. Product data sheet does not constitute an offer. * Parameter tolerance is +/- 10%

This product is a subject to electric andelectronic waste equipment regulations (WEEE).

Certificate CE - Nr: 234/2023

LENA LIGHTING

Lena Lighting S.A.
ul. Kórnicka 52, 63-000 Środa Wielkopolska
tel. +48 61 28 60 333 (Pn-Pt, 8-16), e-mail: hello@lenalighting.pl, www.lenalighting.pl