BARIS 52 LED N 2263MM 3800LM 840 IP44 I CL. PLX BLACK 32W SINGLE

DETAILED CARD

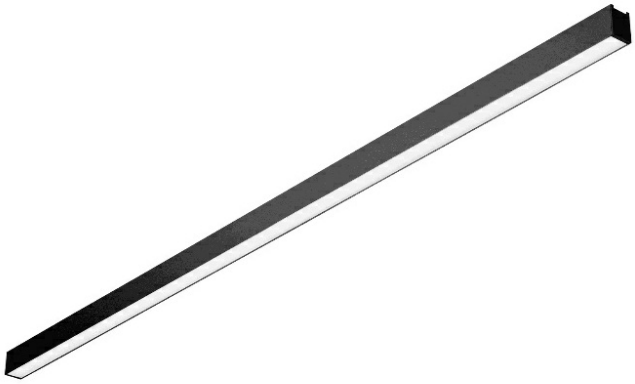

TECHNICAL PARAMETERS

Ingress protection:	IP44
Impact resistance:	IK06
Rated power of the luminaire [W]*:	32
Luminous flux [lm]*:	3800
Colour temperature [K]:	4000
Material of the body:	aluminium
Colour of the body:	black
Diffuser material:	PC
Diffuser type:	OPAL
Mounting version:	surface

CHARACTERISTICS

Suspended or surface-mounted luminaire with classic proportions and modern design. The housing of the luminaire is made of an anodized aluminum profile in gray or an aluminum profile painted in white or black (other colors available on request). The optical system is in the form of a prismatic diffuser (PRM); a dedicated, flexible opal diffuser evenly illuminating the luminaire or with a louver that meets the stringent glare requirements UGR <19 covered with a transparent cover. The modularity and dismantling of the luminaire allow for the replacement of electronic components, such as the LED strip, power supply, and replacement of the lampshade by qualified persons. The luminaire profile has been adapted to work with intelligent IoT modules, which will additionally optimize the level and amount of light provided by it, as well as the direct/indirect version that allows some of the light to be directed upwards, illuminating the ceiling. The luminaire is equipped with a unique suspension system that facilitates the installation of the luminaire and adjustment of the suspension. All Baris 52 LED Single suspended luminaires include 1.2m long pendants with a socket in the set and are equipped with a diffuser.

APPLICATION

The luminaire is intended for indoor use. It is used as the main light source and favors office work that requires concentrated vision. The unique design, the energy-saving LED modules, and the ability to work with external lighting control systems in the DALI standard predestine the luminaire for use in modern office buildings of class A+, with a particular focus on offices, prestigious rooms, conference rooms, passageways, and wherever IP44 protection is required.
Baris 52 LED Single is, as the name suggests, a single lighting element with a specific length. To create a line of length up to 6 meters without connecting the profile and up to 25 meters without connecting the lampshade, version BARIS 52 LED.

BARIS 52 LED N 2263MM 3800LM 840 IP44 I CL. PLX BLACK 32W SINGLE

DETAILED CARD

TECHNICAL PARAMETERS TABLE

Index:	461958
EAN:	5905963461958
Light source:	LED module
Rated power of the luminaire [W]:	32
Luminous flux [lm]:	3800
Supply voltage [V]:	220 - 240
Frequency [Hz]:	50 - 60
Luminous efficacy [lm/W]:	122
Energy efficiency class:	D
Electrical protection class:	I
Colour temperature [K]:	4000
Color rendering index (Ra) >:	80
SDCM:	3
LED lifespan L70B50 [h]:	111500
LED lifespan L80B10 [h]:	70400
LED lifespan L90B10 [h]:	34000
Diffuser material:	PC
Diffuser type:	OPAL
Diffuser colour:	milky

Material of the body:	aluminium
Colour of the body:	black
Dimensions (H/W/T/S) [mm]:	2263/69/52
Impact resistance:	IK06
Ingress protection:	IP44
Mounting version:	surface
Working temperature [°C]:	from -25 to +35
Net weight [kg]:	2.600
Category of application:	office lighting
Photobiological safety:	Risk Group 1 (no photobiological hazard under normal behavioral limitation)
Warranty [years]:	5
CE certificate:	233/2023
ENEC Certificate:	PL BBJ/006/2022/M1
PZH certificate:	B-BK-60112-0357/2023
Environmental Product Declaration (EPD):	852/2025
Manual:	Download PDF
ISO Certificates:	9001:2015, 14001:2015, 45001:2018, 50001:2018
Plik LDT:	Download

LIGHT CURVES

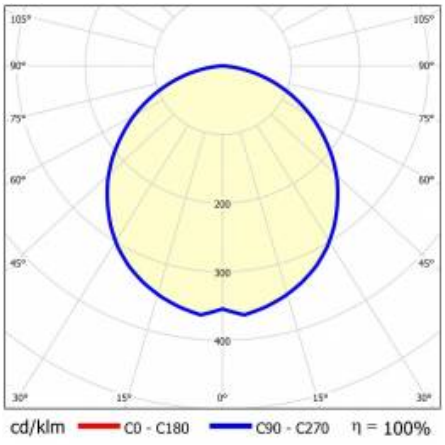

BARIS 52 LED N 2263MM 3800LM 840 IP44 I CL. PLX BLACK 32W SINGLE

DETAILED CARD

TECHNICAL PICTURES

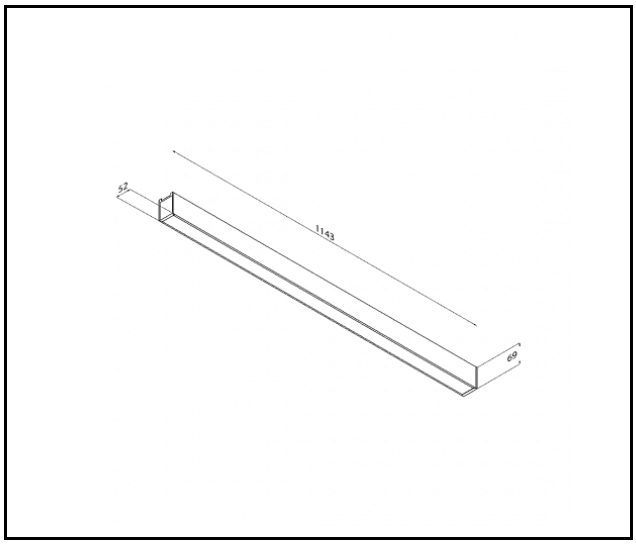

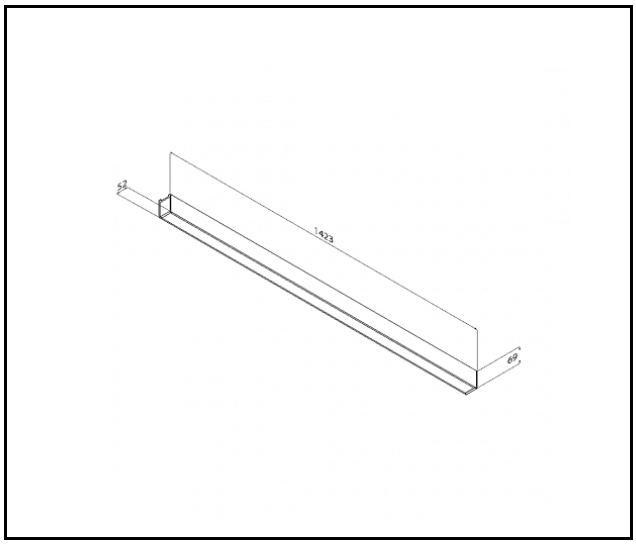

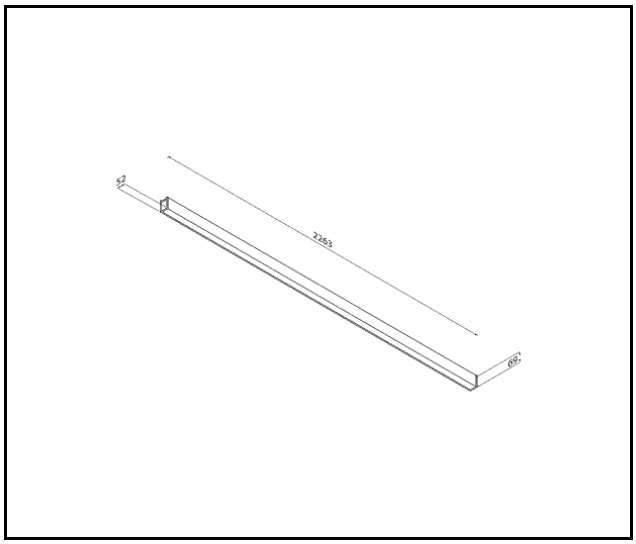

Card creation date: 17 September 2026

The company reserves the right to make design changes or upgrades in the presented product. Product data sheet does not constitute an offer. * Parameter tolerance is +/- 10%

This product is a subject to electric andelectronic waste equipment regulations (WEEE).

Certificate CE - Nr: 233/2023

LENA LIGHTING

Lena Lighting S.A.
ul. Kórnicka 52, 63-000 Środa Wielkopolska
tel. +48 61 28 60 333 (Pn-Pt, 8-16), e-mail: hello@lenalighting.pl, www.lenalighting.pl