BARIS 52 LED N 2263MM 4775LM 840 IP44 I CL. DALI PLX ANODE CO 36W NO DIFFUSER (18W/M)

DETAILED CARD

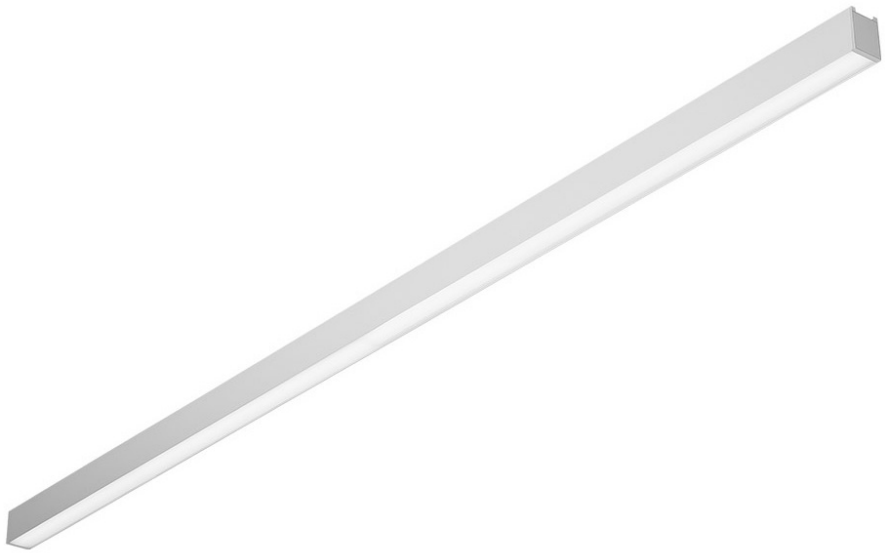

TECHNICAL PARAMETERS

Index:	152719
Rated power of the luminaire [W]*:	36
Luminaire power [W/m]:	18
Luminous flux [lm]*:	4775
Colour temperature [K]:	4000
Ingress protection:	IP44
Energy efficiency class:	D
Colour of the body:	grey

CHARACTERISTICS

A suspended or surface-mounted luminaire with classic proportions and a modern design. The lamp's design allows for the creation of lines up to 6 meters long without profile joints and up to 25 meters without shade joints. Straight connectors and luminous L-, T-, X-, and V-shaped bends allow for the creation of virtually unlimited straight lines, shapes, and patterns. The lamp body is made of an anodized gray aluminum profile or an aluminum profile painted white or black (other colors available upon request). The optical system consists of a prismatic shade (PRM) or a dedicated, flexible opal diffuser that evenly illuminates the lamp. The lamp's modularity and disassembly allow for the replacement of electronic components, such as the LED strip and power supply, and the lampshade itself. The lamp's profile has been adapted for use with intelligent IOT modules, further optimizing the level and quantity of light delivered. A Direct/Indirect version is also available, allowing for some of the light to be directed upwards, illuminating the ceiling. The pendant lamp is not equipped with suspension system components. Due to the extensive customization options, the number of power supply and 1.2m support suspensions, as well as surface-mounted boxes, can be selected from the accessories, depending on your specific needs. **Custom color versions, CRI90, with IoT modules and sensors, DALI versions, and emergency modules are available upon request. Standard colors include anodized gray, black, and white.**

APPLICATION

This lamp is designed for indoor use. It can be used as a main light source and supports office work requiring visual focus. Its unique design, energy-efficient LED modules, and compatibility with external DALI lighting control systems make it suitable for use in modern Class A+ office buildings, with particular emphasis on representative rooms, conference rooms, passageways, and anywhere else requiring IP44 ingress protection. For surface-mounted and pendant BARIS 52 LED lamps (OPAL, PRM), a separate shade (available as an accessory) with the appropriate length, representing the sum of all lines, must be ordered separately. The shade, available in 0.5m increments, is cut by the contractor and has a maximum length of 25m.

BARIS 52 LED N 2263MM 4775LM 840 IP44 I CL. DALI PLX ANODE CO 36W NO DIFFUSER (18W/M)

DETAILED CARD

TECHNICAL PARAMETERS TABLE

Index:	152719
EAN:	5905963152719
Rated power of the luminaire [W]:	36
Luminaire power [W/m]:	18
Luminous flux [lm]:	4775
Supply voltage [V]:	220-240
Frequency [Hz]:	50 - 60
Luminous efficacy [lm/W]:	133
Energy efficiency class:	D
Electrical protection class:	I
Colour temperature [K]:	4000
Color rendering index (Ra) >:	80
SDCM:	3
LED lifespan L70B50 [h]:	150000
LED lifespan L80B10 [h]:	100000
LED lifespan L90B10 [h]:	50000
Diffuser material:	PC

Diffuser type:	OPAL
Colour of the body:	grey
Dimensions (H/W/T/S) [mm]:	2263/69/52
Ingress protection:	IP44
Impact resistance:	IK03
DIMM DALI:	yes
Working temperature [°C]:	from 0 to +35
Warranty [years]:	5
CE certificate:	79/2026
ENEC Certificate:	PL BBJ/006/2022/M1
PZH certificate:	B-BK-60112-0357/2023
Manual:	Download PDF
Environmental Product Declaration (EPD):	852/2025
Category of application:	office lighting
ISO Certificates:	9001:2015, 14001:2015, 45001:2018, 50001:2018
Plik LDT:	Download

LIGHT CURVES

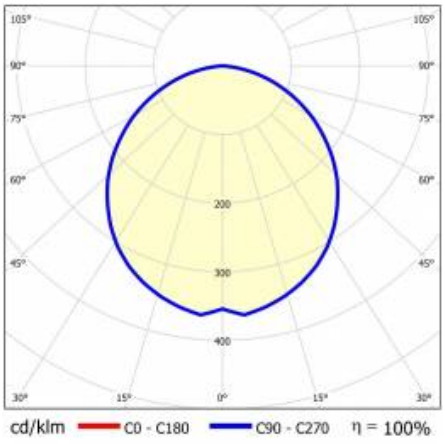

BARIS 52 LED N 2263MM 4775LM 840 IP44 I CL. DALI PLX ANODE CO 36W NO DIFFUSER (18W/M)

DETAILED CARD

TECHNICAL PICTURES

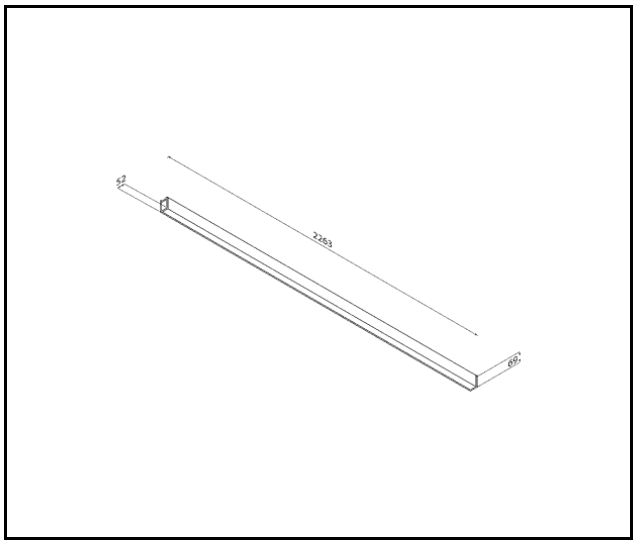

BARIS 52 LED N 2263MM 4775LM 840 IP44 I CL. DALI PLX ANODE CO 36W NO DIFFUSER (18W/M)

DETAILED CARD

ACCESSORIES AVAILABLE

index	Name
318023	Baris 52 - linear connector. straight
318030	Baris 52 - white power suspension
318047	Baris 52 - black power suspension
318054	Baris 52 - anodized power suspension
318061	Baris 52 - Dali white power suspension
318078	Baris 52 - Dali black power suspension
318085	Dali anodized power suspension
318092	Baris 52 – suspension
465000	Baris 52 diffuser PLX length of 1500mm (1.5m)
465017	Baris 52 diffuser PLX length of 2000mm (2.0m)
465024	Baris 52 diffuser PLX length of 2500mm (2.5m)
465031	Baris 52 diffuser PLX length of 3000mm (3.0m)
465048	Baris 52 diffuser PLX length of 3500mm (3.5m)
465055	Baris 52 diffuser PLX length of 4000mm (4.0m)
465062	Baris 52 diffuser PLX length of 4500mm (4.5m)
465079	Baris 52 diffuser PLX length of 5000mm (5.0m)
465086	Baris 52 diffuser PLX length of 5500mm (5.5m)
465093	Baris 52 diffuser PLX length of 6000mm (6.0m)
465109	Baris 52 diffuser PLX length of 6500mm (6.5m)
465116	Baris 52 diffuser PLX length of 7000mm (7.0m)
465123	Baris 52 diffuser PLX length of 7500mm (7.5m)
465130	Baris 52 diffuser PLX length of 8000mm (8.0m)
465147	Baris 52 diffuser PLX length of 8500mm (8.5m)
465154	Baris 52 diffuser PLX length of 9000mm (9.0m)
465161	Baris 52 diffuser PLX length of 9500mm (9.5m)
465178	Baris 52 diffuser PLX length of 10000mm (10.0m)
465185	Baris 52 diffuser PLX length of 10500mm (10.5m)
465192	Baris 52 diffuser PLX length of 11000mm (11.0m)
465208	Baris 52 diffuser PLX length of 11500mm (11.5m)
465215	Baris 52 diffuser PLX length of 12000mm (12.0m)
465222	Baris 52 diffuser PLX length of 12500mm (12.5m)
465239	Baris 52 diffuser PLX length of 13000mm (13.0m)
465246	Baris 52 diffuser PLX length of 13500mm (13.5m)
465253	Baris 52 diffuser PLX length of 14000mm (14.0m)
465260	Baris 52 diffuser PLX length of 14500mm (14.5m)

BARIS 52 LED N 2263MM 4775LM 840 IP44 I CL. DALI PLX ANODE CO 36W NO DIFFUSER (18W/M)

DETAILED CARD

465277	Baris 52 diffuser PLX length of 15000mm (15.0m)
465284	Baris 52 diffuser PLX length of 15500mm (15.5m)
465291	Baris 52 diffuser PLX length of 16000mm (16.0m)
465307	Baris 52 diffuser PLX length of 16500mm (16.5m)
465314	Baris 52 diffuser PLX length of 17000mm (17.0m)
465321	Baris 52 diffuser PLX length of 17500mm (17.5m)
465338	Baris 52 diffuser PLX length of 18000mm (18.0m)
465345	Baris 52 diffuser PLX length of 18500mm (18.5m)
465352	Baris 52 diffuser PLX length of 19000mm (19.0m)
465369	Baris 52 diffuser PLX length of 19500mm (19.5m)
465376	Baris 52 diffuser PLX length of 20000mm (20.0m)
465383	Baris 52 diffuser PLX length of 20500mm (20.5m)
465390	Baris 52 diffuser PLX length of 21000mm (21.0m)
465406	Baris 52 diffuser PLX length of 21500mm (21.5m)
465413	Baris 52 diffuser PLX length of 22000mm (22.0m)
465420	Baris 52 diffuser PLX length of 22500mm (22.5m)
465437	Baris 52 diffuser PLX length of 23000mm (23.0m)
465444	Baris 52 diffuser PLX length of 23500mm (23.5m)
465451	Baris 52 diffuser PLX length of 24000mm (24.0m)
465468	Baris 52 diffuser PLX length of 24500mm (24.5m)
465475	Baris 52 diffuser PLX length of 25000mm (25.0m)
465482	Baris 52 diffuser UGR length of 1500mm (1.5m)
465499	Baris 52 diffuser UGR length of 2000mm (2.0m)
465505	Baris 52 diffuser UGR length of 2500mm (2.5m)
465512	Baris 52 diffuser UGR length of 3000mm (3.0m)
465529	Baris 52 diffuser UGR length of 3500mm (3.5m)
465536	Baris 52 diffuser UGR length of 4000mm (4.0m)
465543	Baris 52 diffuser UGR length of 4500mm (4.5m)
465550	Baris 52 diffuser UGR length of 5000mm (5.0m)
465567	Baris 52 diffuser UGR length of 5500mm (5.5m)
465574	Baris 52 diffuser UGR length of 6000mm (6.0m)
465581	Baris 52 diffuser UGR length of 6500mm (6.5m)
465598	Baris 52 diffuser UGR length of 7000mm (7.0m)
465604	Baris 52 diffuser UGR length of 7500mm (7.5m)
465611	Baris 52 diffuser UGR length of 8000mm (8.0m)
465628	Baris 52 diffuser UGR length of 8500mm (8.5m)
465635	Baris 52 diffuser UGR length of 9000mm (9.0m)
465642	Baris 52 diffuser UGR length of 9500mm (9.5m)
465659	Baris 52 diffuser UGR length of 10000mm (10.0m)

BARIS 52 LED N 2263MM 4775LM 840 IP44 I CL. DALI PLX ANODE CO 36W NO DIFFUSER (18W/M)

DETAILED CARD

465666	Baris 52 diffuser UGR length of 10500mm (10.5m)
465673	Baris 52 diffuser UGR length of 11000mm (11.0m)
465680	Baris 52 diffuser UGR length of 11500mm (11.5m)
465697	Baris 52 diffuser UGR length of 12000mm (12.0m)
465703	Baris 52 diffuser UGR length of 12500mm (12.5m)
465710	Baris 52 diffuser UGR length of 13000mm (13.0m)
465727	Baris 52 diffuser UGR length of 13500mm (13.5m)
465734	Baris 52 diffuser UGR length of 14000mm (14.0m)
465741	Baris 52 diffuser UGR length of 14500mm (14.5m)
465758	Baris 52 diffuser UGR length of 15000mm (15.0m)
465765	Baris 52 diffuser UGR length of 15500mm (15.5m)
465772	Baris 52 diffuser UGR length of 16000mm (16.0m)
465789	Baris 52 diffuser UGR length of 16500mm (16.5m)
465796	Baris 52 diffuser UGR length of 17000mm (17.0m)
465802	Baris 52 diffuser UGR length of 17500mm (17.5m)
465819	Baris 52 diffuser UGR length of 18000mm (18.0m)
465826	Baris 52 diffuser UGR length of 18500mm (18.5m)
465833	Baris 52 diffuser UGR length of 19000mm (19.0m)
465840	Baris 52 diffuser UGR length of 19500mm (19.5m)
465857	Baris 52 diffuser UGR length of 20000mm (20.0m)
465864	Baris 52 diffuser UGR length of 20500mm (20.5m)
465871	Baris 52 diffuser UGR length of 21000mm (21.0m)
465888	Baris 52 diffuser UGR length of 21500mm (21.5m)
465895	Baris 52 diffuser UGR length of 22000mm (22.0m)
465901	Baris 52 diffuser UGR length of 22500mm (22.5m)
465918	Baris 52 diffuser UGR length of 23000mm (23.0m)
465925	Baris 52 diffuser UGR length of 23500mm (23.5m)
465932	Baris 52 diffuser UGR length of 24000mm (24.0m)
465949	Baris 52 diffuser UGR length of 24500mm (24.5m)
465956	Baris 52 diffuser UGR length of 25000mm (25.0m)
465963	Baris 52 diffuser PRM length of 1500mm (1.5m)
465970	Baris 52 diffuser PRM length of 2000mm (2.0m)
465987	Baris 52 diffuser PRM length of 2500mm (2.5m)
465994	Baris 52 diffuser PRM length of 3000mm (3.0m)
466007	Baris 52 diffuser PRM length of 3500mm (3.5m)
466014	Baris 52 diffuser PRM length of 4000mm (4.0m)
466021	Baris 52 diffuser PRM length of 4500mm (4.5m)
466038	Baris 52 diffuser PRM length of 5000mm (5.0m)
466045	Baris 52 diffuser PRM length of 5500mm (5.5m)

BARIS 52 LED N 2263MM 4775LM 840 IP44 I CL. DALI PLX ANODE CO 36W NO DIFFUSER (18W/M)

DETAILED CARD

466052	Baris 52 diffuser PRM length of 6000mm (6.0m)
466069	Baris 52 diffuser PRM length of 6500mm (6.5m)
466076	Baris 52 diffuser PRM length of 7000mm (7.0m)
466083	Baris 52 diffuser PRM length of 7500mm (7.5m)
466090	Baris 52 diffuser PRM length of 8000mm (8.0m)
466106	Baris 52 diffuser PRM length of 8500mm (8.5m)
466113	Baris 52 diffuser PRM length of 9000mm (9.0m)
466120	Baris 52 diffuser PRM length of 9500mm (9.5m)
466137	Baris 52 diffuser PRM length of 10000mm (10.0m)
466144	Baris 52 diffuser PRM length of 10500mm (10.5m)
466151	Baris 52 diffuser PRM length of 11000mm (11.0m)
466168	Baris 52 diffuser PRM length of 11500mm (11.5m)
466175	Baris 52 diffuser PRM length of 12000mm (12.0m)
466182	Baris 52 diffuser PRM length of 12500mm (12.5m)
466199	Baris 52 diffuser PRM length of 13000mm (13.0m)
466205	Baris 52 diffuser PRM length of 13500mm (13.5m)
466212	Baris 52 diffuser PRM length of 14000mm (14.0m)
466229	Baris 52 diffuser PRM length of 14500mm (14.5m)
466236	Baris 52 diffuser PRM length of 15000mm (15.0m)
466243	Baris 52 diffuser PRM length of 15500mm (15.5m)
466250	Baris 52 diffuser PRM length of 16000mm (16.0m)
466267	Baris 52 diffuser PRM length of 16500mm (16.5m)
466274	Baris 52 diffuser PRM length of 17000mm (17.0m)
466281	Baris 52 diffuser PRM length of 17500mm (17.5m)
466298	Baris 52 diffuser PRM length of 18000mm (18.0m)
466304	Baris 52 diffuser PRM length of 18500mm (18.5m)
466311	Baris 52 diffuser PRM length of 19000mm (19.0m)
466328	Baris 52 diffuser PRM length of 19500mm (19.5m)
466335	Baris 52 diffuser PRM length of 20000mm (20.0m)
466342	Baris 52 diffuser PRM length of 20500mm (20.5m)
466359	Baris 52 diffuser PRM length of 21000mm (21.0m)
466366	Baris 52 diffuser PRM length of 21500mm (21.5m)
466373	Baris 52 diffuser PRM length of 22000mm (22.0m)
466380	Baris 52 diffuser PRM length of 22500mm (22.5m)
466397	Baris 52 diffuser PRM length of 23000mm (23.0m)
466403	Baris 52 diffuser PRM length of 23500mm (23.5m)
466410	Baris 52 diffuser PRM length of 24000mm (24.0m)
466427	Baris 52 diffuser PRM length of 24500mm (24.5m)
466434	Baris 52 diffuser PRM length of 25000mm (25.0m)

BARIS 52 LED N 2263MM 4775LM 840 IP44 I CL. DALI PLX ANODE CO 36W NO DIFFUSER (18W/M)

DETAILED CARD

673979	Baris 52 - DALI linear connector
442629	Baris 52 - Touch DIM linear connector

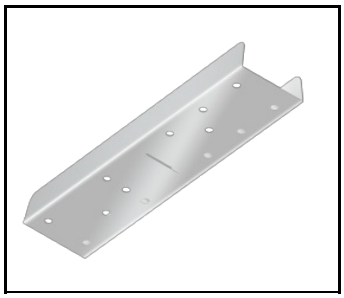

Baris 52 - linear connector. straight (318023)

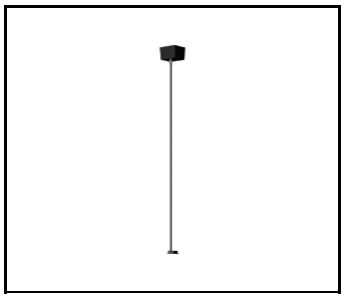

Baris 52 - Dali black power suspension (318078)

Card creation date: 19 March 2026

The company reserves the right to make design changes or upgrades in the presented product. Product data sheet does not constitute an offer. * Parameter tolerance is +/- 10%

This product is a subject to electric andelectronic waste equipment regulations (WEEE).

Certificate CE - Nr: 79/2026

LENA LIGHTING

Lena Lighting S.A.
ul. Kórnicka 52, 63-000 Środa Wielkopolska
tel. +48 61 28 60 333 (Pn-Pt, 8-16), e-mail: hello@lenalighting.pl, www.lenalighting.pl