LUNGO II TRACK 1900LM 20° II CL. IP20 BLACK/GOLD 830 DALI (18W)

DETAILED CARD



TECHNICAL PARAMETERS

Index:	700910
Rated power of the luminaire [W]*:	18
Luminous flux [lm]*:	1900
Colour temperature [K]:	3000
Color rendering index (Ra) >:	80
Beam angle [°]:	20
Material of the body:	aluminium
Colour of the body:	black
Ring colour:	gold
Dimensions (H/W/T/S) [mm]:	fi=60 L=170

CHARACTERISTICS

The Lungo II LED Track luminaire is equipped with an integrated, durable and energy-efficient LED module that provides a luminous flux of up to 1330 lm, depending on the selected version. The user can choose one of three colour temperatures: 2700 K, 3000 K or 4000 K, as well as two colour rendering index variants – Ra 80 or Ra 90, which allows the light quality to be adjusted to the nature of the space. The luminaire offers three light distribution angles: 20°, 40° and 70°, making it suitable for both accent and general lighting. The body is made of a powder-coated aluminium housing, available in white, black, grey or black with a gold interior. The IP20 protection rating allows the luminaire to be used indoors, while the track version is fully compatible with 3-phase busbar systems, ensuring flexibility in installation and lighting configuration.

APPLICATION

Luminaire is used in spaces such as:
- corridors and passageways in office and institutional buildings
- entrance areas and lobbies
- staircases
- reception areas

LUNGO II TRACK 1900LM 20° II CL. IP20 BLACK/GOLD 830 DALI (18W)

DETAILED CARD

TECHNICAL PARAMETERS TABLE

Index:	700910
EAN:	5905963700910
Category type:	decorative fixtures
Category of application:	architectural, office lighting, commercial facilities
Light source:	COB
Rated power of the luminaire [W]:	18
Luminous flux [lm]:	1900
Supply voltage [V]:	220-240
Frequency [Hz]:	0/50/60
Luminous efficacy [lm/W]:	106
Energy efficiency class:	E
Electrical protection class:	II
Colour temperature [K]:	3000
Color rendering index (Ra) >:	80
LED lifespan L90B10 [h]:	50000
Working temperature [°C]:	from 0 to +35
Beam angle [°]:	20
Exchangeable source:	yes
Optics:	reflector
Optics material:	aluminium

Material of the body:	aluminium
Colour of the body:	black
Ring material:	aluminium
Ring colour:	gold
Dimensions (H/W/T/S) [mm]:	fi=60 L=170
Mounting dimensions [mm]:	L= 40mm fi6mm
Ingress protection:	IP20
Mounting version:	track
DIMM DALI:	yes
Dimensions of single box [mm]:	260/130/65
Number on the palette [pcs]:	480
Net weight [kg]:	0.515
Gross weight [kg]:	0.585
Photobiological safety:	Risk Group 1 (no photobiological hazard under normal behavioral limitation)
Warranty [years]:	5
CE certificate:	01/2026
Manual:	Download PDF
ISO Certificates:	9001:2015, 14001:2015, 45001:2018, 50001:2018
Plik LDT:	Download

LUNGO II TRACK 1900LM 20° II CL. IP20 BLACK/GOLD 830 DALI (18W)

DETAILED CARD

TECHNICAL PICTURES

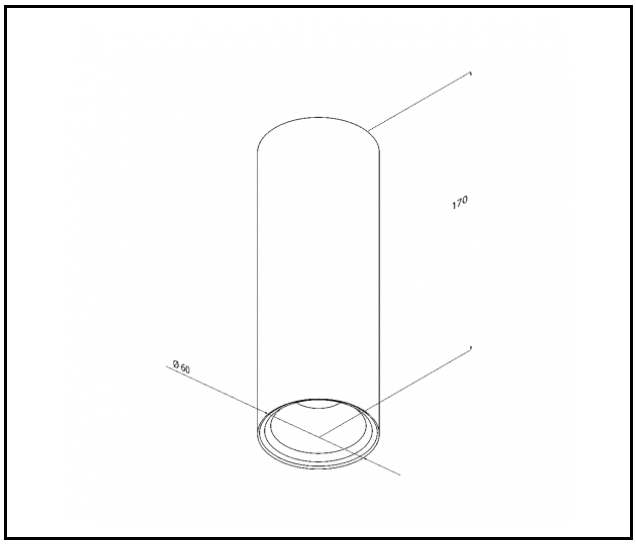

Card creation date: 05 January 2026

The company reserves the right to make design changes or upgrades in the presented product. Product data sheet does not constitute an offer. * Parameter tolerance is +/- 10%

This product is a subject to electric andelectronic waste equipment regulations (WEEE).

Certificate CE - Nr: 01/2026

LENA LIGHTING

Lena Lighting S.A.
ul. Kórnicka 52, 63-000 Środa Wielkopolska
tel. +48 61 28 60 333 (Pn-Pt, 8-16), e-mail: hello@lenalighting.pl, www.lenalighting.pl