LUMEDIC 595X595MM SW 13000LM RA80 4000K GLASS/PRM IP65 I CL. W IK09 R 86W

DETAILED CARD



TECHNICAL PARAMETERS

Index:	783210
Ingress protection:	IP65
Impact resistance:	IK09
Rated power of the luminaire [W]*:	86
Luminous flux [lm]*:	13000
Colour temperature [K]:	4000
Color rendering index (Ra) >:	80
Energy efficiency class:	C
Material of the body:	powder coated steel
Diffuser material:	tempered glass

CHARACTERISTICS

Lumedic SW R this is a specialist cleanroom luminaire designed for cleanrooms with an air cleanliness class of ISO 3–9, in accordance with ISO 14644-1:2015 Cleanroom, and meeting stringent hygiene and sterility requirements. Its design ensures ease of cleaning and high mechanical and environmental resistance. A robust steel housing with IP65 protection on the room side and on the technical side ensures complete tightness in a sterile environment, while allowing free air flow above the suspended ceiling. Service access is provided from the technical side (top inspection), allowing maintenance without interfering with the clean room. The front of the luminaire is made of aluminium and 4 mm thick tempered glass, resistant to impact (IK09 class) and chemicals. The modular shutter system (Glass / Opal / PRM) allows you to select the appropriate optical characteristics depending on the application requirements — from uniform, diffused light to precise directional distribution. The SW R version is designed for installation in reinforced ceilings.

APPLICATION

- laboratories (microbiological, pharmaceutical, chemical),
- hospitals (operating theatres, intensive care units, diagnostic laboratories),
- food and pharmaceutical industry,
- cleanrooms in electronics and semiconductor manufacturing.

LUMEDIC 595X595MM SW 13000LM RA80 4000K GLASS/PRM IP65 I CL. W IK09 R 86W

DETAILED CARD

TECHNICAL PARAMETERS TABLE

Index:	783210
EAN:	5905963783210
Light source:	LED module
Rated power of the luminaire [W]:	86
Supply voltage [V]:	220 - 240
Frequency [Hz]:	0/50/60
Luminous flux [lm]:	13000
Luminous efficacy [lm/W]:	151
Energy efficiency class:	C
Electrical protection class:	I
Colour temperature [K]:	4000
Color rendering index (Ra) >:	80
SDCM:	3
Power factor:	0.95
Surge protection [kV]:	2
Diffuser material:	tempered glass
Diffuser type:	Glass/PRM
Optics material:	PS
Optics:	PRM
Material of the body:	powder coated steel
Colour of the body:	biały (RAL 9003)
Ring material:	aluminium

Ring colour:	white (RAL 9003)
Dimensions (H/W/T/S) [mm]:	595/595/65
Mounting dimensions [mm]:	585/585
Impact resistance:	IK09
Ingress protection:	IP65
Mounting version:	recessed
Working temperature [°C]:	from -20 to +35
LED lifespan L70B50 [h]:	150000
LED lifespan L80B10 [h]:	100000
LED lifespan L90B10 [h]:	50000
Number on the palette [pcs]:	16
Net weight [kg]:	11
Photobiological safety:	RG0 - exempt (no photobiological hazard)
Warranty [years]:	5
CE certificate:	147/2026
ENEC Certificate:	0463/ENEC/25
PZH certificate:	B-BK-60112-0109/2026
Environmental Product Declaration (EPD):	869/2025
Manual:	Download PDF
ISO Certificates:	9001:2015. 14001:2015, 45001:2018, 50001:2018, ISO 3 - 9 (ISO 14644-1:2015)
Plik LDT:	Download

LUMEDIC 595X595MM SW 13000LM RA80 4000K GLASS/PRM IP65 I CL. W IK09 R 86W

DETAILED CARD

TECHNICAL PICTURES

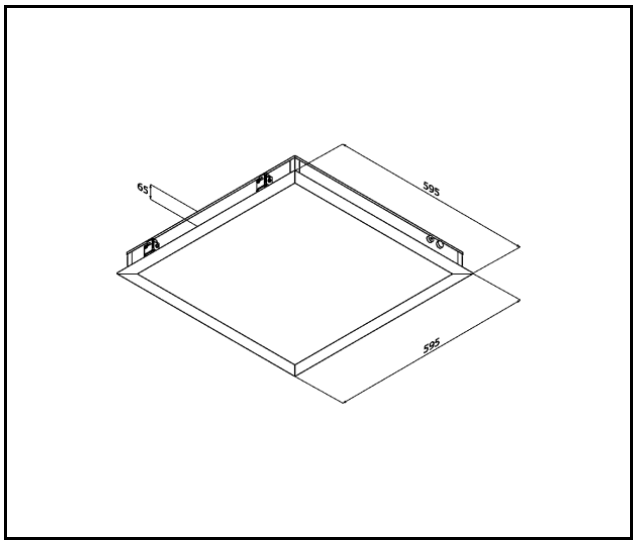

Card creation date: 04 September 2026

The company reserves the right to make design changes or upgrades in the presented product. Product data sheet does not constitute an offer. * Parameter tolerance is +/- 10%

This product is a subject to electric andelectronic waste equipment regulations (WEEE).

Certificate CE - Nr: 147/2026

LENA LIGHTING

Lena Lighting S.A.
ul. Kórnicka 52, 63-000 Środa Wielkopolska
tel. +48 61 28 60 333 (Pn-Pt, 8-16), e-mail: hello@lenalighting.pl, www.lenalighting.pl