TIARA 2 LED L 24675LM 740 RM3 IP66 II CL. DALI IK10 (145W)

DETAILED CARD



TECHNICAL PARAMETERS

Index:	761744
Ingress protection:	IP66
Impact resistance:	IK10
Rated power of the luminaire [W]*:	145
Luminous flux [lm]*:	24675
Colour temperature [K]:	4000
Color rendering index (Ra) >:	70
Electrical protection class:	II
Optics:	RM3
Control:	Yes + 5-stage power reduction

CHARACTERISTICS

TIARA 2 LED L a family of LED road luminaires based on a proven form factor. It uses directional multi-lens matrices, made of PMMA, with each lens having the same optics, ensuring that the luminous characteristics remain constant over time. Components from renowned manufacturers and new LED panels contribute to the very high luminous efficacy achieved at the output of the luminaire - reaching 181 lm/W. The two-chamber construction of the luminaire maintains the tightness of the optical chamber during assembly work and allows tool-free access to the electrical equipment chamber. The upper part of the luminaire, has dedicated hinges and a safety cord. Using standard tools, quick and convenient servicing is possible, allowing the replacement of any component without having to dismantle the entire luminaire and make soldered connections. The body and handle are made of die-cast aluminium, powder-coated grey, and have a very high IP66 protection rating and IK09 mechanical impact resistance. Standard features: ergonomic light module suspension system; fully programmable DALI driver; CLO constant lumen maintenance and autonomous 5-stage power reduction functions available; NTC overheating protection; filter to prevent condensation; connection terminals; tool-free access. Additional options: NEMA, ZHAGA connectors; interfacing with control systems, RCR motion sensor; additional SP10kV protection outside the power supply, on/off power supply without power reduction function; knife disconnector to disconnect voltage if the electrical compartment is opened; design with cable terminated with quick disconnect; painting in any RAL colour. Certifications: CE, RoHS, ENEC, ENEC+, Zhaga D4i.

APPLICATION

Thanks to the use of dedicated optics, it is possible to illuminate objects such as: motorways, motorways, national roads, voivodeships, districts, communes, municipalities, housing estates, area lighting. Optics are also available to illuminate: pedestrian crossings, pavements and cycle paths.

TIARA 2 LED L 24675LM 740 RM3 IP66 II CL. DALI IK10 (145W)

DETAILED CARD

TECHNICAL PARAMETERS TABLE

Index:	761744
EAN:	5905963761744
Category type:	street lighting
Category of application:	Street lighting
Version:	L
Light source:	LED module
Rated power of the luminaire [W]:	145
Supply voltage [V]:	220 - 240
Frequency [Hz]:	50 - 60
Luminous flux [lm]:	24675
Luminous efficacy [lm/W]:	170
Energy efficiency class:	B
Electrical protection class:	II
Colour temperature [K]:	4000
Color rendering index (Ra) >:	70
SDCM:	5
Power factor:	1
Surge protection [kV]:	10
Diffuser material:	szkło hartowane 5mm
Diffuser type:	transparent
Optics material:	PMMA
Optics:	RM3
Exchangeable source:	yes
Material of the body:	powder coated aluminium

Colour of the body:	gray RAL 9006
Dimensions (H/W/T/S) [mm]:	839/113/265
Mounting dimensions [mm]:	ø40-60
Impact resistance:	IK10
Ingress protection:	IP66
Mounting version:	Top, on pole / Side, on boom
Tilt angle adjustment [°]:	-30 to +120 (peak); -120 to +30 (side)
Lateral surface (SCx) [m2]:	0.029
Working temperature [°C]:	from -40 to +50
DIMM DALI:	yes
Control:	Yes + 5-stage power reduction
Protection type:	NTC + ESD
Net weight [kg]:	6.500
ULOR:	0%
Photobiological safety:	Risk Group 1 (no photobiological hazard under normal behavioral limitation)
Technical Warranty:	5 with the possibility of extension to 10
ENEC Certificate:	0449/ENEC/25/M1; 0163/ENEC+/25/A1
CE certificate:	126/2025
Zhaga-D4i:	ZG407420042023
Environmental Product Declaration (EPD):	682/2024
Manual:	Download PDF
LED lifespan L95B10 [h]:	100000
ISO Certificates:	9001:2015, 14001:2015, 45001:2018, 50001:2018
ENEC Plus:	0163/ENEC+/25/A1

LIGHT CURVES

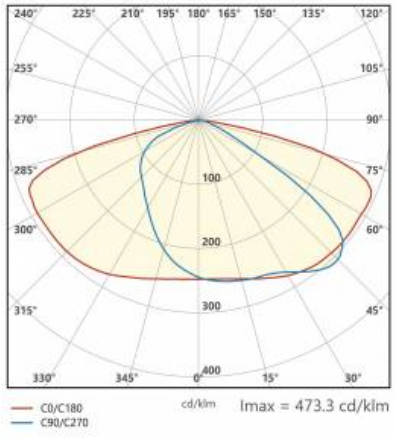

TIARA 2 LED L 24675LM 740 RM3 IP66 II CL. DALI IK10 (145W)

DETAILED CARD

TECHNICAL PICTURES

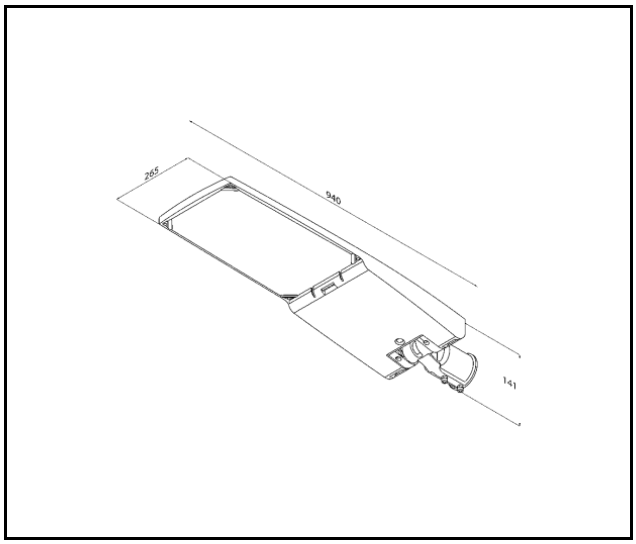

TIARA 2 LED L 24675LM 740 RM3 IP66 II CL. DALI IK10 (145W)

DETAILED CARD

ACCESSORIES AVAILABLE

index	Name
314049	wall holder (galvanized)
314056	wall holder (grey)
UL00184	mounting grip 74 mm TIARA LED
989766	Tiara 2 LED 64mm handle cover
WSEL431	HAI HD05R RC Programming Remote Control for HD0406VRH IoT

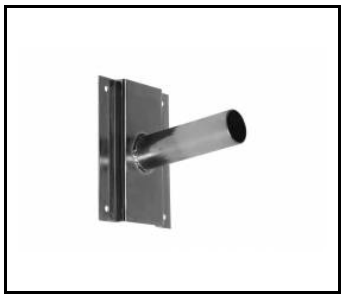

wall holder (galvanized) (314049)



wall holder (grey) (314056)



mounting grip 74 mm TIARA LED (UL00184)

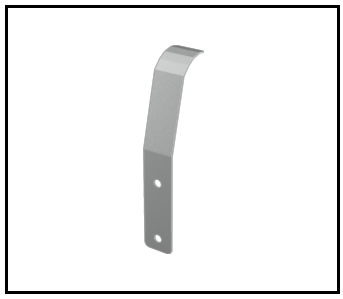

Tiara 2 LED 64mm handle cover (989766)

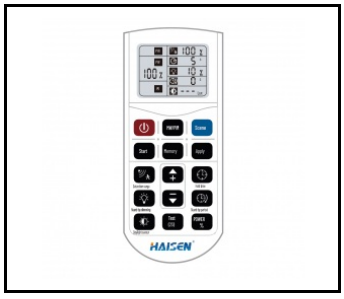

HAI HD05R RC Programming Remote Control for HD0406VRH IoT (WSEL431)

The company reserves the right to make design changes or upgrades in the presented product. Product data sheet does not constitute an offer. * Parameter tolerance is +/- 10%

This product is a subject to electric andelectronic waste equipment regulations (WEEE).

Certificate CE - Nr: 126/2025

LENA LIGHTING

Lena Lighting S.A.
ul. Kórnicka 52, 63-000 Środa Wielkopolska
tel. +48 61 28 60 333 (Pn-Pt, 8-16), e-mail: hello@lenalighting.pl, www.lenalighting.pl