QUEST LED EVO 2XL HBZ 69000LM I CL. IP67 840 CN (33X68D) 476W

DETAILED CARD



TECHNICAL PARAMETERS

Index:	799815
Ingress protection:	IP67
Rated power of the luminaire [W]*:	476
Luminous flux [lm]*:	69000
Colour temperature [K]:	4000
Color rendering index (Ra) >:	80
SDCM:	3
Electrical protection class:	I
Energy efficiency class:	C
Material of the body:	aluminium

CHARACTERISTICS

Quest LED EVO L, their high-bay versions: surface-mounted Quest LED EVO L HB NT and suspended Quest LED EVO L HB Z are extremely efficient floodlights and premium HB class luminaires, manufactured in Poland. Their body is made of die-cast aluminium, powder coated, without an external heat sink and ribs that make it difficult to keep clean. The diffuser is made of tempered glass, under which there are LEDs with the highest efficiency. Different types of optics, especially asymmetrical ones, provide great freedom in choosing the right solution for a specific application. Thanks to the highest tightness rating on the market (IP67) and maximum impact resistance (IK10), the floodlights will perform well in all conditions, regardless of the weather and installation location. The new version of the renowned and proven QUEST model offers even better lighting parameters, achieving an efficiency of over 170 lm/W. Quest LED EVO L meets the requirements of PN-EN 60598-2 part 5, which allows it to be classified as an illumination projector, enabling complete freedom of installation in any position, with 360° rotation and resistance to strong winds. An additional advantage for contractors is the sealed quick connector – an innovative solution that eliminates traditional, time-consuming connection methods. Thanks to an intuitive system of coloured latches, connector installation is simple, quick and tool-free. The HB NT version is designed for surface mounting as a highbay using dedicated brackets. The HB Z version is designed for suspension. The accessory kit includes brackets for pole mounting, a frame for flush mounting (e.g. shelters), light pollution reduction screens and protective grids in two colours with different degrees of light reduction (white RAL7016: 4%, body colour RAL7016: 8%). The models can be equipped with an external motion and twilight sensor. They are also available in the ENDURA version, resistant to elevated ambient temperatures up to 50°C. The range also includes dual-module versions with increased flux and power. DALI versions are available (in the case of a gap in a specific power rating in the range with a DALI power supply, check the ENDURA DALI versions).

APPLICATION

Quest LED EVO L is widely used in lighting educational, administrative and institutional facilities, halls, garages, passageways, warehouses, shops, as well as in the food industry and commercial and service facilities related to food products. They are an ideal solution for small sports fields, open spaces and car parks. They can be mounted as floodlights on poles and masts, on building facades, as well as surface-mounted highbays (HB NT version) and suspended highbays (HB Z version). Thanks to the flush-mounted option, they are perfect for shelters. Quest LED EVO L is an excellent choice for production plants and halls as well as large-area warehouses.

QUEST LED EVO 2XL HBZ 69000LM I CL. IP67 840 CN (33X68D) 476W

DETAILED CARD

TECHNICAL PARAMETERS TABLE

Index:	799815
EAN:	5905963799815
Rated power of the luminaire [W]:	476
Luminous flux [lm]:	69000
Supply voltage [V]:	220-240
Surge protection [kV]:	6
AC voltage range [V]:	198-264
DC voltage range [V]:	176-280
Frequency [Hz]:	50-60
Luminous efficacy [lm/W]:	145
Energy efficiency class:	C
Electrical protection class:	I
Colour temperature [K]:	4000
Color rendering index (Ra) >:	80
SDCM:	3
Beam angle [°]:	33 x 68
Diffuser material:	glass
Diffuser type:	transparent
Material of the body:	aluminium
Colour of the body:	RAL7016

Dimensions (H/W/T/S) [mm]:	753/635/85
Mounting dimensions [mm]:	139/326
Ingress protection:	IP67
Mounting version:	suspended
Working temperature [°C]:	from -20 to +35
Dimensions of single box [mm]:	745
Number on the palette [pcs]:	5
Version:	2xL HB Z
Light distribution type:	CN
LED lifespan L70B50 [h]:	158000
LED lifespan L80B10 [h]:	108000
LED lifespan L90B10 [h]:	108000
Net weight [kg]:	19
Warranty [years]:	5
CE certificate:	80/2025
Environmental Product Declaration (EPD):	816/2025
Manual:	Download PDF
ISO Certificates:	9001:2015, 14001:2015, 45001:2018, 50001:2018
Plik LDT:	Download

QUEST LED EVO 2XL HBZ 69000LM I CL. IP67 840 CN (33X68D) 476W

DETAILED CARD

TECHNICAL PICTURES

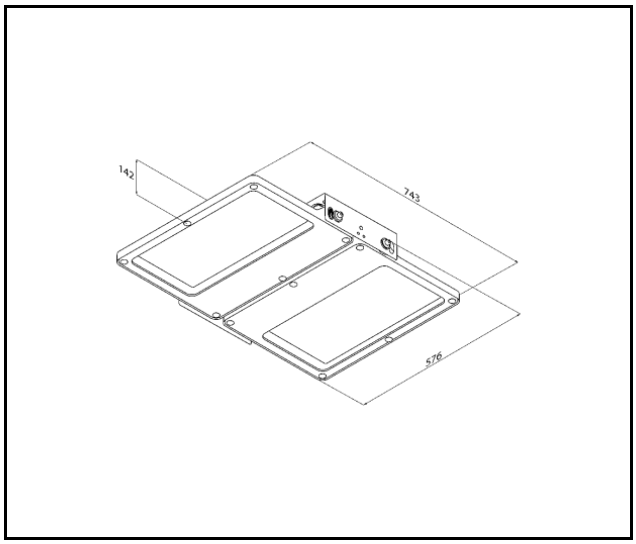

QUEST LED EVO 2XL HBZ 69000LM I CL. IP67 840 CN (33X68D) 476W

DETAILED CARD

ACCESSORIES AVAILABLE

index	Name
840449	QUEST LED EVO L protective grid RAL7016
840081	QUEST LED EVO L protective grid RAL9003
840388	QUEST LED EVO S/M/L RCR set 1x
840371	QUEST LED EVO S/M/L RCR set 2x

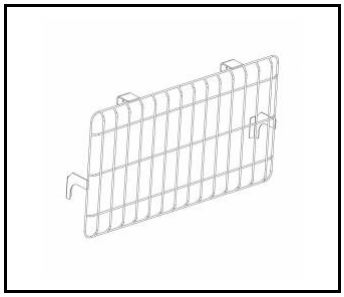

QUEST LED EVO L protective grid RAL7016 (840449)

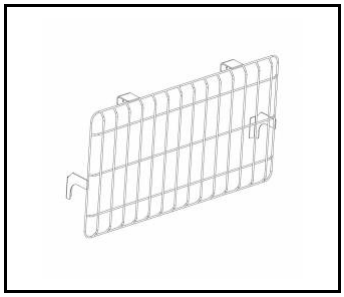

QUEST LED EVO L protective grid RAL9003 (840081)

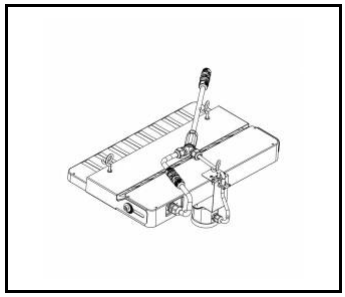

QUEST LED EVO S/M/L RCR set 1x (840388)

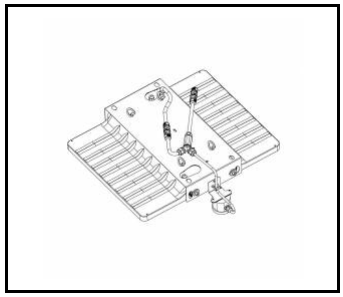

QUEST LED EVO S/M/L RCR set 2x (840371)

The company reserves the right to make design changes or upgrades in the presented product. Product data sheet does not constitute an offer. * Parameter tolerance is +/- 10%

This product is a subject to electric andelectronic waste equipment regulations (WEEE).

Certificate CE - Nr: 80/2025

LENA LIGHTING

Lena Lighting S.A.
ul. Kórnicka 52, 63-000 Środa Wielkopolska
tel. +48 61 28 60 333 (Pn-Pt, 8-16), e-mail: hello@lenalighting.pl, www.lenalighting.pl