QUEST LED EVO M ENDURA HB NT 11400LM I CL. IP67 840 CN (33X68D) 71W

DETAILED CARD

TECHNICAL PARAMETERS

Index:	799082
Ingress protection:	IP67
Rated power of the luminaire [W]*:	71
Luminous flux [lm]*:	11400
Colour temperature [K]:	4000
Color rendering index (Ra) >:	80
SDCM:	3
Electrical protection class:	I
Energy efficiency class:	B
Material of the body:	aluminium

CHARACTERISTICS

The Endura version of Quest LED EVO M luminaires, their high-bay versions: surface-mounted Quest LED EVO M HB NT and suspended Quest LED EVO M HB Z are extremely efficient premium class floodlights, manufactured in Poland, adapted to operate at high temperatures (up to 50 degrees C). The body is made of die-cast aluminium, powder coated, without an external heat sink and ribs that make it difficult to keep clean. The basic version has a steel arm with a 7.5-degree scale, while the highbay endura (HB NT) version is available in surface-mounted and suspended (HB Z) versions. The diffuser is made of tempered glass, under which there are LEDs with the highest efficiency. Various types of optics, especially asymmetrical ones, provide great freedom in selecting the right solution for a specific application. Thanks to the highest tightness rating on the market (IP67) and maximum impact resistance (IK10), it will perform well in all conditions, regardless of the weather and installation location. The new version of the renowned and proven QUEST model in its smallest version offers even better lighting parameters, achieving an efficiency of over 170 lm/W. The Endura variant also meets the requirements of PN-EN 60598-2 part 5, which allows them to be classified as illumination projectors. This means complete freedom of installation in any position, with 360° rotation and resistance to strong winds – an advantage not offered by other floodlights. An additional advantage for contractors is the sealed quick connector – an innovative solution that eliminates traditional, time-consuming connection methods (screws). Thanks to an intuitive system of coloured latches, connector installation is simple, quick and tool-free. The accessory kit includes: pole mounting brackets (basic version); frame for flush mounting, e.g. in shelters (basic version); light pollution reduction screens (basic version); protective grilles in two colours with different degrees of light reduction (white RAL7016: 4%, body colour RAL7016: 8%). The models can be equipped with an external motion and twilight sensor.

APPLICATION

Quest LED EVO M Endura, Quest LED EVO M Endura HB NT and Endura HB Z are used in: lighting educational, administrative and institutional facilities, halls, garages, passageways, warehouses, shops, the food industry and commercial and service facilities related to food products Illumination of buildings, small sports fields, open spaces and car parks, environments with elevated ambient temperatures (up to 50 degrees C). Installation options: as a floodlight, on poles and masts, on building facades, as a surface-mounted highbay (HB NT version), suspended highbay (HB Z version), flush-mounted (e.g. shelters). The product is particularly well suited for use in factories and production halls as well as large-area warehouses, especially in areas exposed to high temperatures.

QUEST LED EVO M ENDURA HB NT 11400LM I CL. IP67 840 CN (33X68D) 71W

DETAILED CARD

TECHNICAL PARAMETERS TABLE

Index:	799082	**Colour of the body:**	RAL7016
EAN:	5905963799082	**Dimensions (H/W/T/S) [mm]:**	424/635/152
Rated power of the luminaire [W]:	71	**Ingress protection:**	IP67
Luminous flux [lm]:	11400	**Working temperature [°C]:**	from -20 to +50
Supply voltage [V]:	220-240	**Dimensions of single box [mm]:**	550
Surge protection [kV]:	6	**Number on the palette [pcs]:**	48
AC voltage range [V]:	198-264	**Version:**	M HB NT
DC voltage range [V]:	176-280	**Light distribution type:**	CN
Frequency [Hz]:	0/50/60	**LED lifespan L70B50 [h]:**	162000
Luminous efficacy [lm/W]:	161	**LED lifespan L80B10 [h]:**	101000
Energy efficiency class:	B	**LED lifespan L90B10 [h]:**	47000
Electrical protection class:	I	**Net weight [kg]:**	8
Colour temperature [K]:	4000	**Warranty [years]:**	5
Color rendering index (Ra) >:	80	**CE certificate:**	81/2025
SDCM:	3	**Environmental Product Declaration (EPD):**	816/2025
Beam angle [°]:	33 x 68	**Manual:**	Download PDF
Diffuser material:	glass	**Plik LDT:**	Download
Material of the body:	aluminium		

QUEST LED EVO M ENDURA HB NT 11400LM I CL. IP67 840 CN (33X68D) 71W

DETAILED CARD

TECHNICAL PICTURES

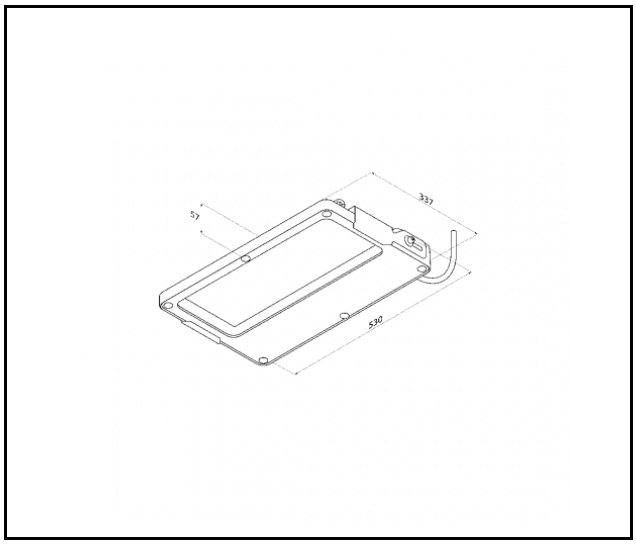

QUEST LED EVO M ENDURA HB NT 11400LM I CL. IP67 840 CN (33X68D) 71W

DETAILED CARD

ACCESSORIES AVAILABLE

index	Name
840432	QUEST LED EVO M protective grid RAL7016
840074	QUEST LED EVO M protective grid RAL9003
840388	QUEST LED EVO M/L RCR set 1x
840371	QUEST LED EVO M/L RCR set 2x

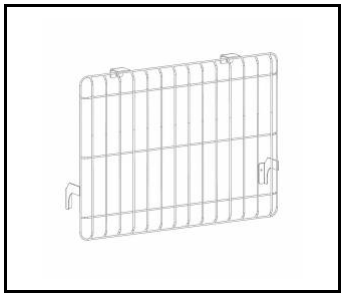

QUEST LED EVO M protective grid RAL7016 (840432)

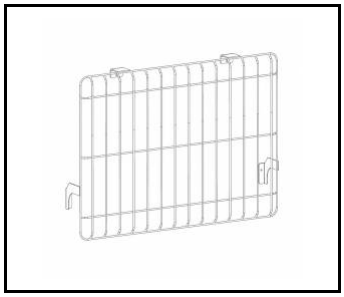

QUEST LED EVO M protective grid RAL9003 (840074)

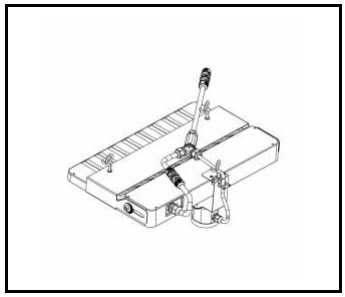

QUEST LED EVO M/L RCR set 1x (840388)

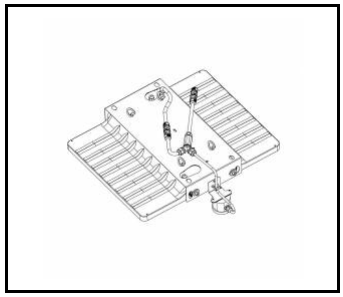

QUEST LED EVO M/L RCR set 2x (840371)

Card creation date: 15 September 2025

The company reserves the right to make design changes or upgrades in the presented product. Product data sheet does not constitute an offer. * Parameter tolerance is +/- 10%

This product is a subject to electric andelectronic waste equipment regulations (WEEE).

Certificate CE - Nr: 81/2025

LENA LIGHTING

Lena Lighting S.A.
ul. Kórnicka 52, 63-000 Środa Wielkopolska
tel. +48 61 28 60 333 (Pn-Pt, 8-16), e-mail: hello@lenalighting.pl, www.lenalighting.pl