ILUMI GROUND S 1390LM 830 IP67 I CL. 10° SILVER ALU 17W

DETAILED CARD



TECHNICAL PARAMETERS

Index:	377228
Rated power of the luminaire [W]*:	17
Ingress protection:	IP67
Impact resistance:	IK10
Luminous flux [lm]*:	1390
Colour temperature [K]:	3000
Color rendering index (Ra) >:	80
Material of the body:	aluminium
Colour of the body:	silver
Beam angle [°]:	10

CHARACTERISTICS

The Ilumi Ground series was designed for the most demanding customers looking for customised and economical solutions. The body of the luminaire is made of cast aluminium, which has enabled a significant reduction in weight and price. A mounting box is included.

APPLICATION

The luminaires are ideal for illuminating garden or park spaces. Due to their lightweight construction, they are easy to install on external walls. The Ilumi Ground luminaire can be used to illuminate a wide range of spaces and objects, such as parks, gardens, terraces, squares, premises and plants.

ILUMI GROUND S 1390LM 830 IP67 I CL. 10° SILVER ALU 17W

DETAILED CARD

TECHNICAL PARAMETERS TABLE

Index:	377228
EAN:	5905963377228
Light source:	COB LED
Rated power of the luminaire [W]:	17
Supply voltage [V]:	220 - 240
Frequency [Hz]:	50 - 60
Luminous flux [lm]:	1390
Electrical protection class:	I
Colour temperature [K]:	3000
Color rendering index (Ra) >:	80
Beam angle [°]:	10
Material of the body:	aluminium
Colour of the body:	silver
Ring material:	SST
Ring colour:	silver

Version:	S
Dimensions (H/W/T/S) [mm]:	fi148
Impact resistance:	IK10
Ingress protection:	IP67
Working temperature [°C]:	from -20 to +55
Control:	ON/OFF
Wire type:	H07RN-F 3G4
Cable length [m]:	0.50
Category type:	accent lighting
LED lifespan L90B10 [h]:	60000
Warranty [years]:	5
CE certificate:	55/2025
Manual:	Download PDF
Plik LDT:	Download

LIGHT CURVES

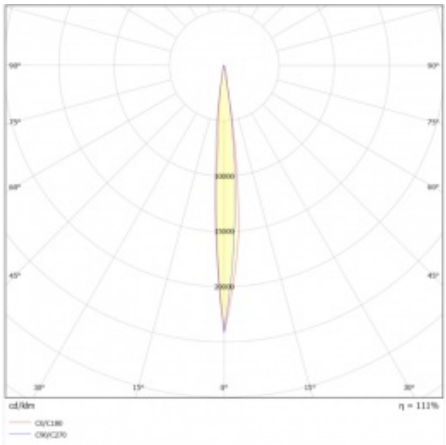

ILUMI GROUND S 1390LM 830 IP67 I CL. 10° SILVER ALU 17W

DETAILED CARD

TECHNICAL PICTURES

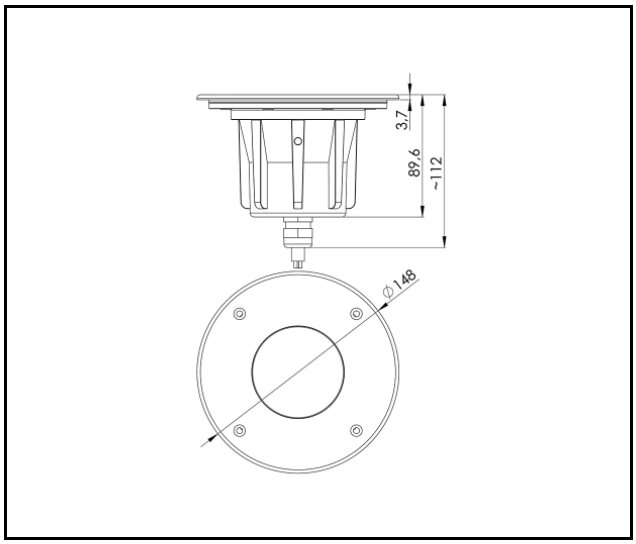

Card creation date: 30 September 2024

The company reserves the right to make design changes or upgrades in the presented product. Product data sheet does not constitute an offer. * Parameter tolerance is +/- 10%

This product is a subject to electric andelectronic waste equipment regulations (WEEE).

Certificate CE - Nr: 55/2025

LENA LIGHTING

Lena Lighting S.A.
ul. Kórnicka 52, 63-000 Środa Wielkopolska
tel. +48 61 28 60 333 (Pn-Pt, 8-16), e-mail: hello@lenalighting.pl, www.lenalighting.pl