BARIS 52 LED P SM 595MM 1150LM 840 IP44/ IP20 I CL. PRM ANODE CO 9W

DETAILED CARD

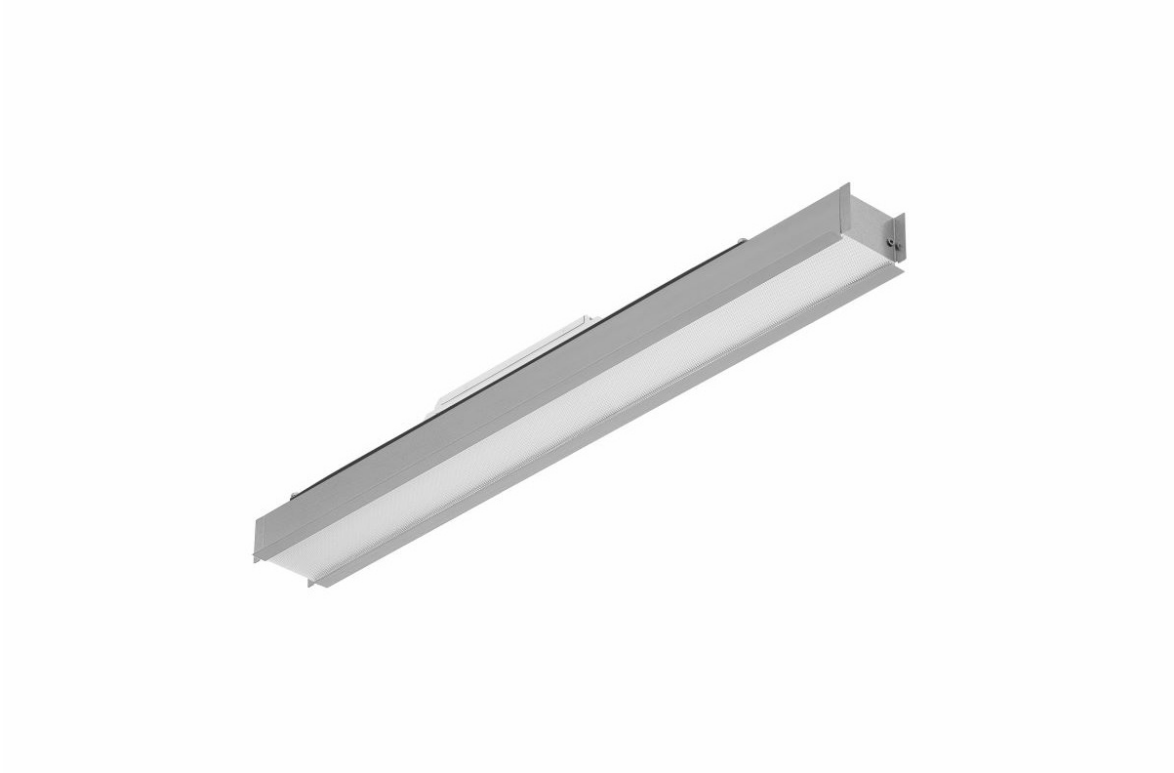

TECHNICAL PARAMETERS

Ingress protection:	IP44/IP20
Impact resistance:	IK03
Rated power of the luminaire [W]*:	9
Luminous flux [lm]*:	1150
Colour temperature [K]:	4000
Material of the body:	aluminium
Colour of the body:	grey
Diffuser material:	PC
Diffuser type:	PRM
Mounting version:	recessed

CHARACTERISTICS

A recessed luminaire with classic proportions and modern design, intended for installation in modular ceilings. The luminaire is available in three lengths: 595mm, 1195mm, 1795mm. The housing of the luminaire is made of an anodized aluminum profile in gray or an aluminum profile painted in white or black (other colors available on request). The optical system is in the form of a dedicated, flexible opal diffuser that evenly illuminates the luminaire, with a PRM prismatic diffuser. The luminaire is equipped with a complete mounting system enabling quick and easy installation in modular ceilings.

APPLICATION

The luminaire is dedicated to indoor use. It is applied as the source of the main light and is conducive to office work requiring concentration of eyesight. Classic design, energy-saving LED modules, and the possibility of cooperation with external lighting control systems in the DALI standard dedicate the lamp to be used in modern office buildings of the A+ class, with particular consideration of representative rooms, conference halls, passageways.

BARIS 52 LED P SM 595MM 1150LM 840 IP44/ IP20 I CL. PRM ANODE CO 9W

DETAILED CARD

TECHNICAL PARAMETERS TABLE

Index:	928017
EAN:	95905963928017
Light source:	LED module
Nominal power [W]:	8
Rated power of the luminaire [W]:	9
Luminous flux [lm]:	1150
Supply voltage [V]:	220 - 240
Frequency [Hz]:	50 - 60
Luminous efficacy [lm/W]:	131
Energy efficiency class:	D
Electrical protection class:	I
Colour temperature [K]:	4000
Color rendering index (Ra) >:	80
SDCM:	3
LED lifespan L70B50 [h]:	150000
LED lifespan L80B10 [h]:	100000
LED lifespan L90B10 [h]:	50000
Diffuser material:	PC
Diffuser type:	PRM

Diffuser colour:	transparent
Optics:	Microprism
Material of the body:	aluminium
Colour of the body:	grey
Dimensions (H/W/T/S) [mm]:	593/69/60
Impact resistance:	IK03
Ingress protection:	IP44/IP20
Mounting version:	recessed
Working temperature [°C]:	from 0 to +35
Net weight [kg]:	0.890
Category of application:	office lighting
Warranty [years]:	5
CE certificate:	38/2026
PZH certificate:	B-BK-60112-0357/2023
Manual:	Download PDF
Environmental Product Declaration (EPD):	852/2025
ISO Certificates:	9001:2015, 14001:2015, 45001:2018, 50001:2018
Plik LDT:	Download

LIGHT CURVES

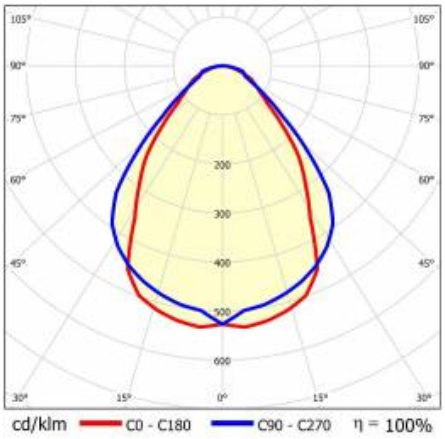

Card creation date: 02 April 2026

The company reserves the right to make design changes or upgrades in the presented product. Product data sheet does not constitute an offer. * Parameter tolerance is +/- 10%

This product is a subject to electric andelectronic waste equipment regulations (WEEE).

Certificate CE - Nr: 38/2026

LENA LIGHTING
Lena Lighting S.A.
ul. Kórnicka 52, 63-000 Środa Wielkopolska
tel. +48 61 28 60 333 (Pn-Pt, 8-16), e-mail: hello@lenalighting.pl, www.lenalighting.pl